JCB35Q3 Controller

As the Q series control box, JCB35Q3 is mainly used in hospital and nursing industries. JCB35Q2 is equipped with globally applicable and optimized SMPS (switching power supply), which is carried with one hand control port and three channels. JCB35Q2 has an elegant appearance and compact design. The fixed slider of the lower housing can be locked to the platform by screws. The motor power will be cut off in the control box instead of in the signal switch of linear actuator when actuators in JCB35Q3 system reach the limitation.



General Features

Power:	input_100-240VAC, 50/60 Hz; The output power is 50W in the rated state, and the output power is 120W in the working mode
Power point light:	Yes
Actuator interface:	Max.3 channels, ET 6pin waterproof bending plug
Handset interface:	1 channel, 10pin crystal head waterproof bending plug
Emergency stop switch interface:	optional, 01 waterproof bending plug
Standby power:	Maximum 1W (230V)
Colour:	Gray
Control idea:	H-bridge, the service life exceeds 20000 cycles
Duty cycle:	2/18 @ 25°C; on/off continuous use (120W at 25°C for 120 seconds)
Weight:	o.6kg (including power cable)
IP Grade:	IPX4
Single channe maximum current:	5 ± 0.5A
Power management:	voltage management can ensure maximum power operation and limit the maximum output power
Safety system:	switching power supply thermal protection switching power supply over-current protection switching power supply short circuit protection Over current protection of control panel
Installation:	Compatible with actuators equipped with special mounting connector; frame (fixed by screws or slider block)
Line card:	All ports have
Approvals:	EN 60601-1: 2006+A11+A1+A12 EMC: IEC60601-1-2

Usage

Operating Temperature:	+5 °C to +40°C
Storage Temperature:	-10°C to 50°C
Relative Humidity:	20% to 80%, non-condensing
Atmospheric Pressure:	860 to 1060 hPa
Altitude:	Max. 2000m

Dimension Drawing

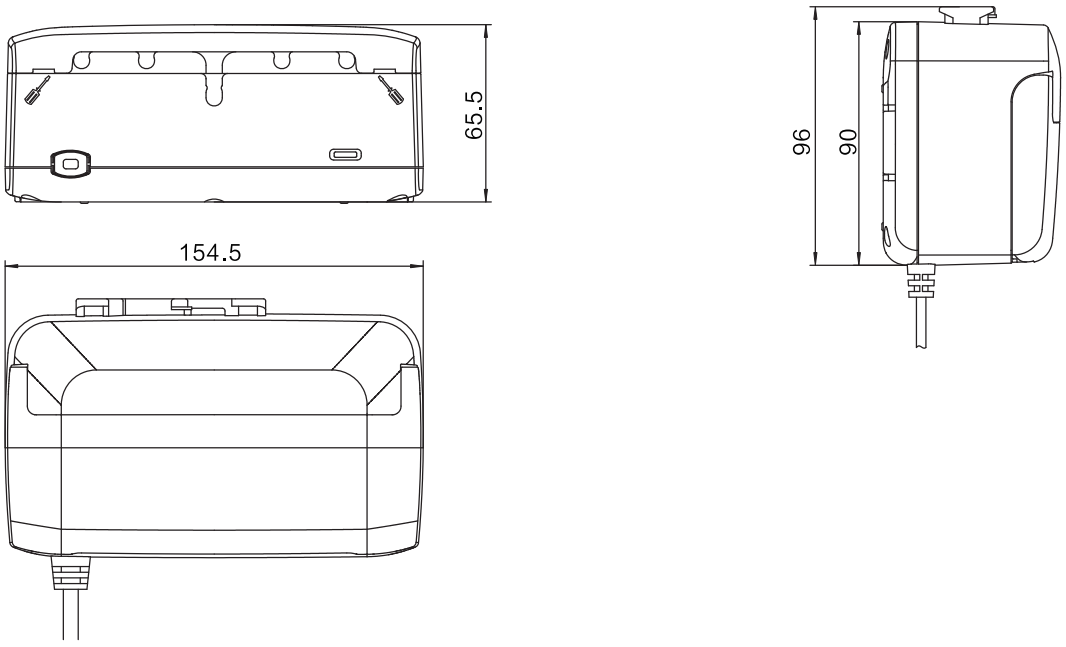

The extended state of the installation slider

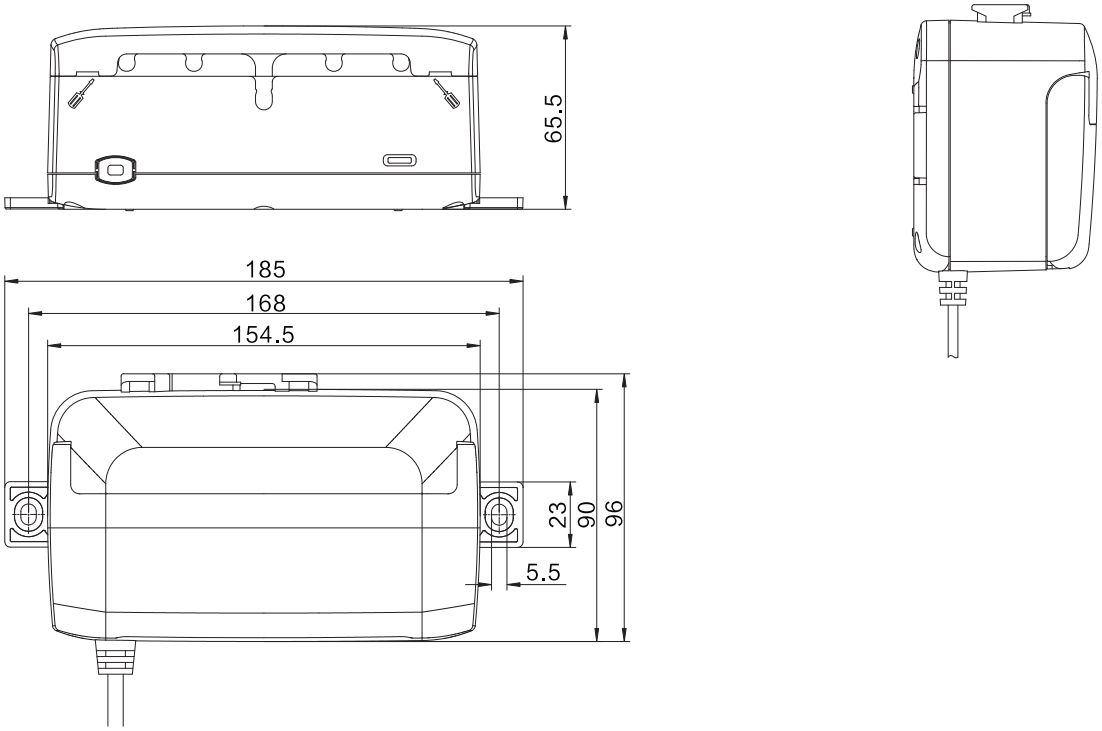

Ordering Examples

Take **JCB35Q3033GQ005950140** for example

Model	**JCB35Q3**	
Extension features	**X**	0 = With no extension function
Channel	**X**	3 = 3 Channels
input voltage	**X**	3 = 110VAC-240VAC
Color	**X**	G = Gray
PCB code	**XX**	Q0059 = specific code
Power or capacity	**XX**	50 = 50W
Optional features	**XX**	14 = outgoing line wire with emergency stop switch

System Connection

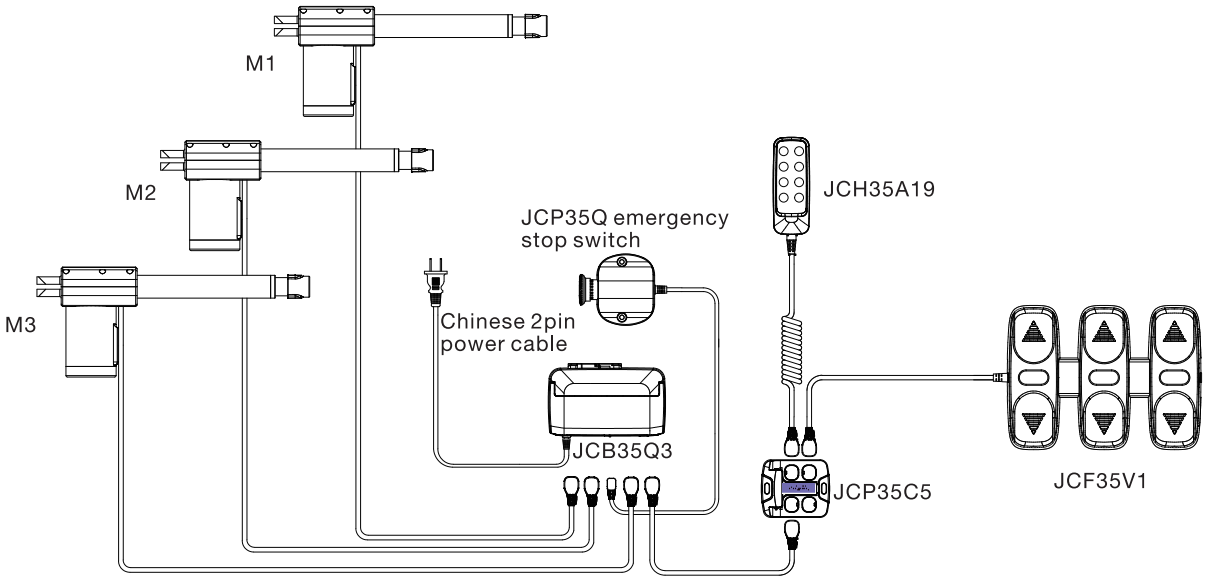

Mounting

It can be installed on various actuators (JC35L22, JC35L9), and can also be installed on the bed frame.

Install on JC35L22

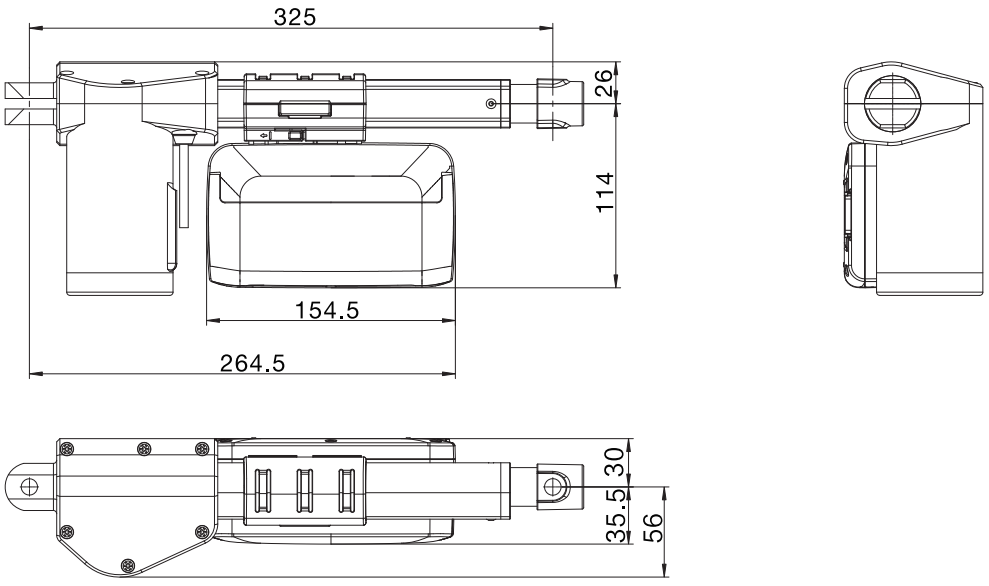

Install on JC35L9

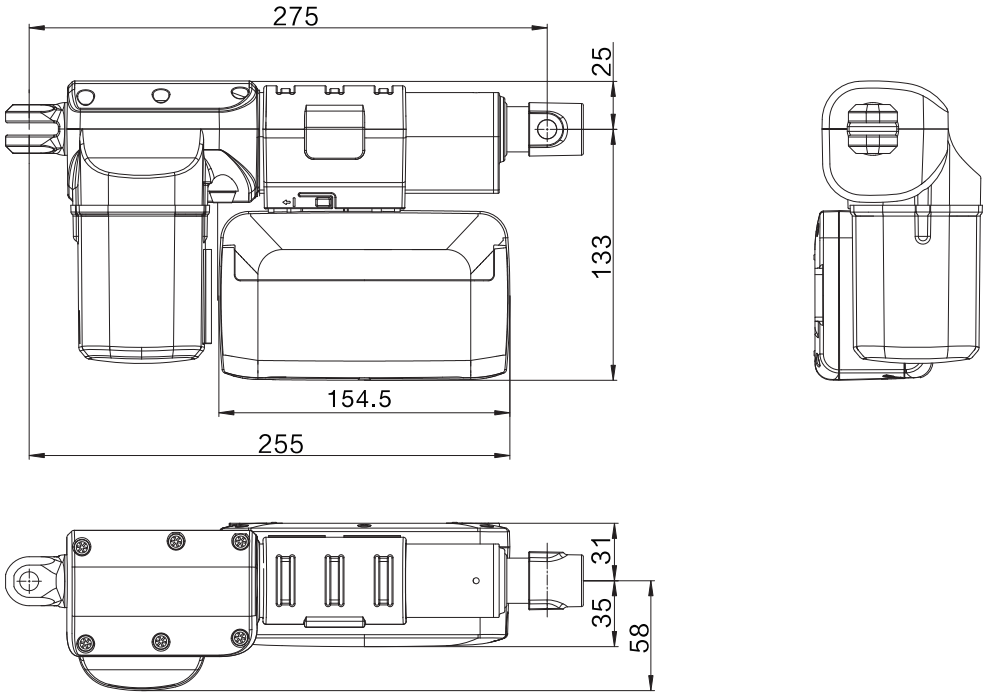

Installation Connector

matching JC35L9

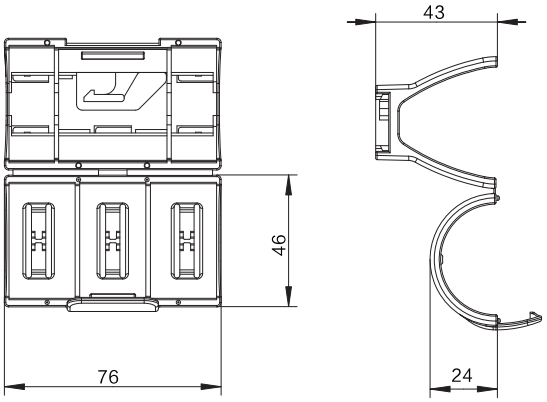

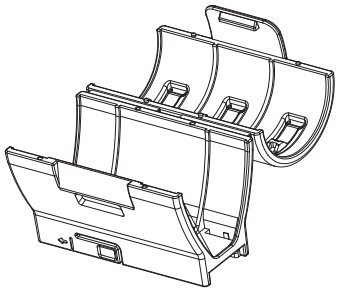

matching JC35L22

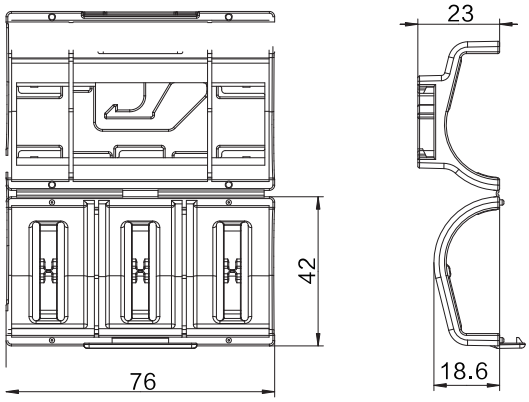

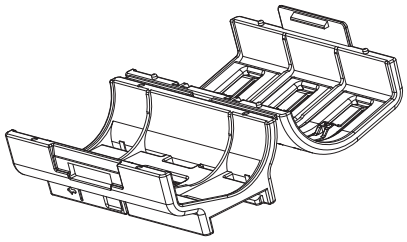

Usage

Put your thumb in the groove of the red arrow in the installation slide block diagram, and push it horizontally until the limit stops, as shown in the following figure, so that the installation slide block exposes the fixed hole.

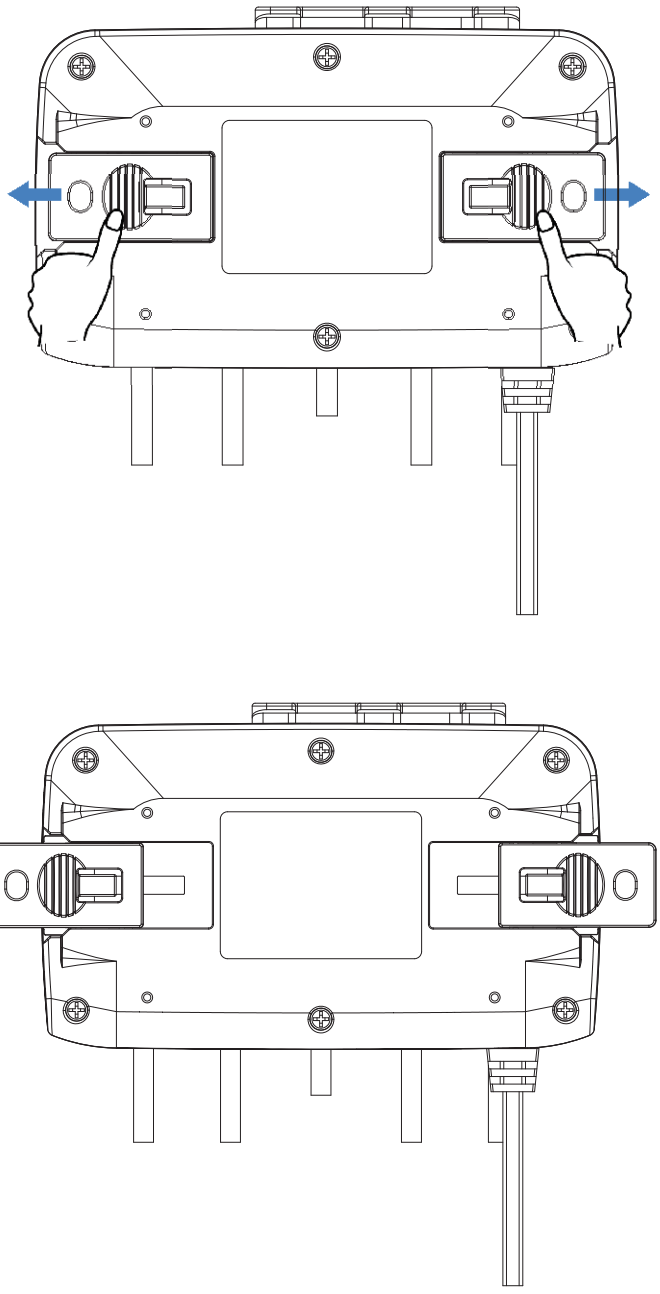

Install On Frame

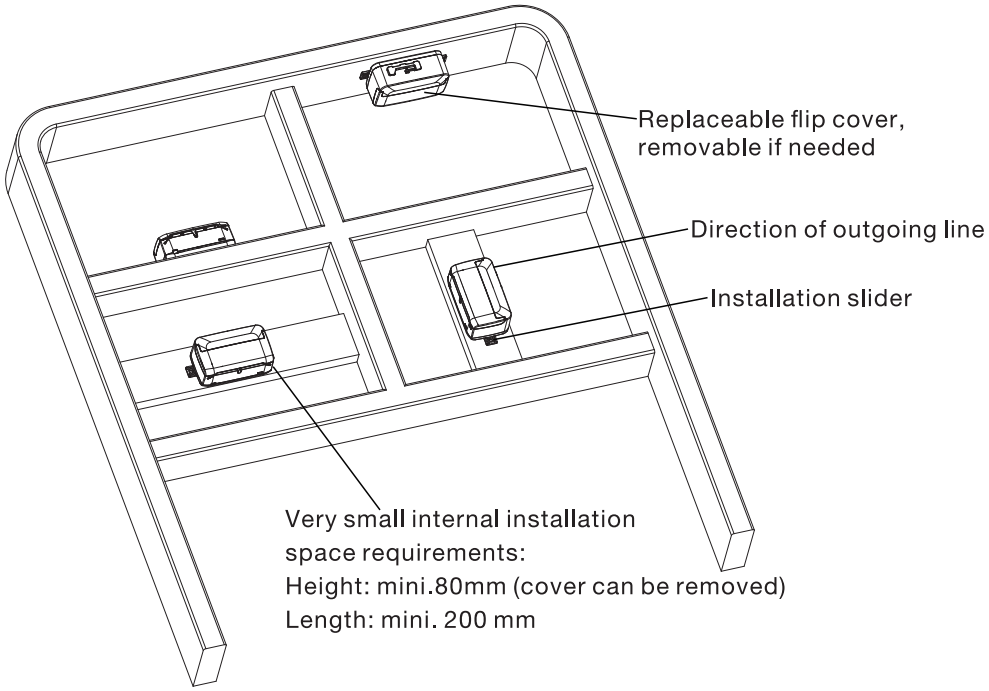

It is recommended to install JCB35T2 where it can drain water.
Suggested torque: 0.6Nm +/-0.1
The controller can be installed on the bed frame or any other application according to one of the following installation procedures:
1) Place the M5 nut on the exposed hole of the mounting block, and fix the mounting block with M5 bolts from the rear side.
2) Fix the mounting slide with M5 machine screws with flat washers (install a nut on the back of the mounting slide).
3) Fix the mounting slider to the frame with self-tapping screws.

Cable locking and management

Actuator lock

The control box JCB35T2 has a uniquely designed cable cover. When the cable cover is closed, it acts as an integrated actuator lock.

1. Install the cable plug into the control box
2. Close the cable cover until it snaps into place (see the red arrow)

In order to allow maintenance personnel to have free access to the cables, the cover can stay in a fixed position when it is fully opened.



LED indication:

JCB35Q3 has a green LED power indicator.
When JCB35Q3 is successfully connected to the main power (Show green);
In other cases, the LED is off



Strictly abiding by medical safety certifications

Passed EMC tests. To ensure our products pass all kinds of tests domestic or abroad.

Communication protocol development

Aiming at different applications, develop more extensive functions for control system.

Professional customization

Powerful R&D strength, fully satisfy customers' needs. Development cycle is about 10 days, seizing more market opportunities

Intelligent Control of Bluetooth

Mobile phone as the remote, applying in home care. Market pioneer, Jiecang provides better choices

Wireless Communication

Controllers adopt high-frequency wireless system. It can avoid interference mixing with signal receivers, assisting in remote control over medical equipment.

Latest Weighing System

Designed for physiotherapy beds and medical care beds. Cantilever carrying weighing sensor, it is applicable to different bedsteads dispensing with any adjustment

Disclaimer and Exclusion of Liability

The user must determine the suitability of JIECANG products under specific conditions. JIECANG is committed to providing the latest product information. However, as JIECANG' s product are constantly improving, it is possible to make changes to JIECANG' s product without prior notice. Therefore, JIECANG cannot guarantee the correctness and authenticity of the product information. Although JIECANG will do its best to meet the order requirements, due to the above reasons, JIECANG cannot guarantee the delivery capacity of any specific product.

Therefore, JIECANG reserves the right to stop selling any products listed on the website or product catalog or other JIECANG written materials. All sales activities must be carried out in accordance with the requirements of JIECANG sales and Delivery Standard Clauses. For copies of relevant documents, please contact JIECANG.

Notes for mounting and usage can be found in the corresponding mounting manual

TECHNOLOGY
DRIVES INTELLIGENT LIFE