JC35EG Lifting Column



JC35EG is a 3-stage round column with high load capacity which is up to 2500N for vertical lifting. With compact structure and elegant design, JC35EG is widely applied to demanding applications like ICU hospital beds.

Several signal feedback models are optional for JC35EG: hall sensors or potentiometer.

Features And Options

Dynamic Load Push(N):	2500N
Speed At Full Load(mm/s):	15
Installation Dimensions:	L=S/2+200
Standard:	With Hall feedback (for synchronization or memory function)
Optional:	Aluminum alloy clamp accessories available for installation
Approval:	IEC60601-1:2012 EN 60601-1:2006+A12:2014 ANSI/AAMI ES60601-1:2005/(R)2012 and A1:2012, C1:2009/(R)2012 and A2:2010/(R)2012

Usage

Duty Cycle:	10%, max. continuous work for 2min. and 18 min. off
Operating Temperature:	+5°C to +40°C
Compatibility:	JC35EG3 is compatible with JCB35A, JCB35B, JCB35E, JCB35Q, JCB35T, JCB35R

Dimensions

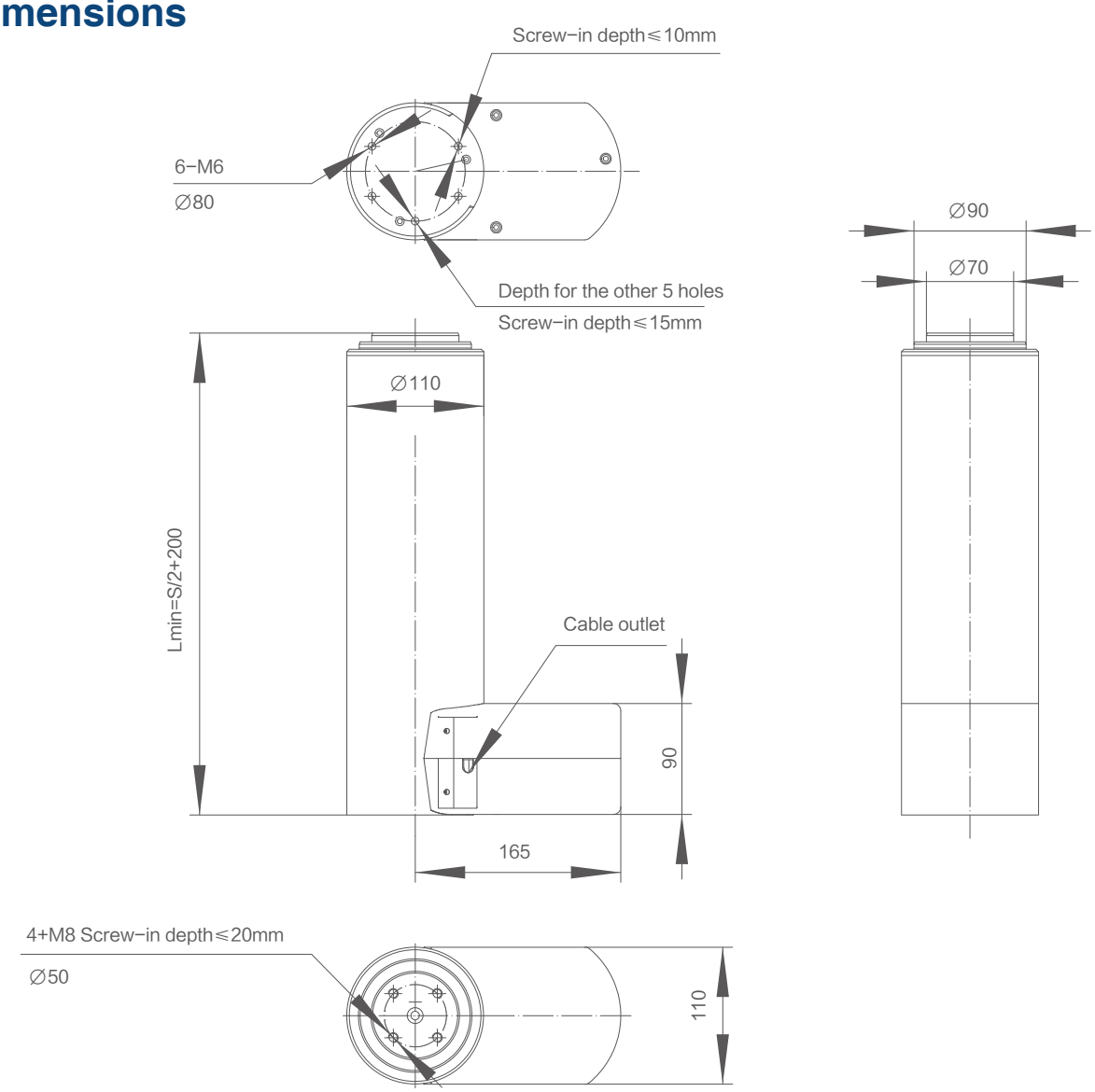
Screw-in depth≤10mm
6-M6
∅80
Depth for the other 5 holes
Screw-in depth≤15mm
∅110
∅90
∅70
Lmin=S/2+200
Cable outlet
90
165
4+M8 Screw-in depth≤20mm
∅50
110

Technical Specifications (Standard Value)

Input voltage (VDC)	Spindle pitch (mm)	Max. load in push (N)	Max. load in pull (N)	Mechanical self-lock (N)	Speed at no load/full load (mm/s)	Current at full load (A)
29	6+6	2000	0	2500	20/15	6.5

Remarks: It can achieve better self-locking ability with Jiecang control box;
The above data is the standard value of the test data (inspection specification) at room temperature of 25°C.
1kg=2.2lb, 100mm=3.94inch

Diagram of relationship between stroke length and load

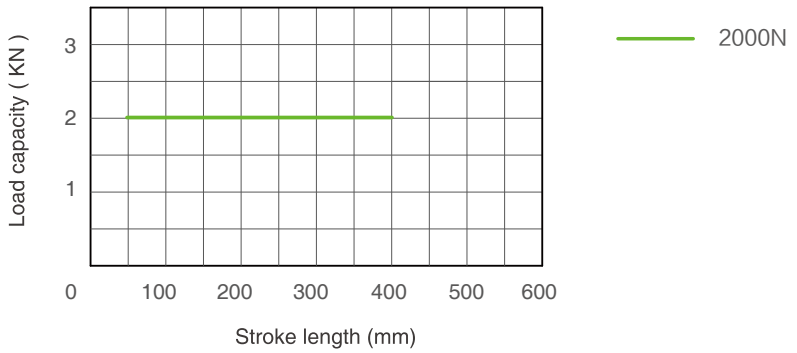

Characteristic Curve

2000N

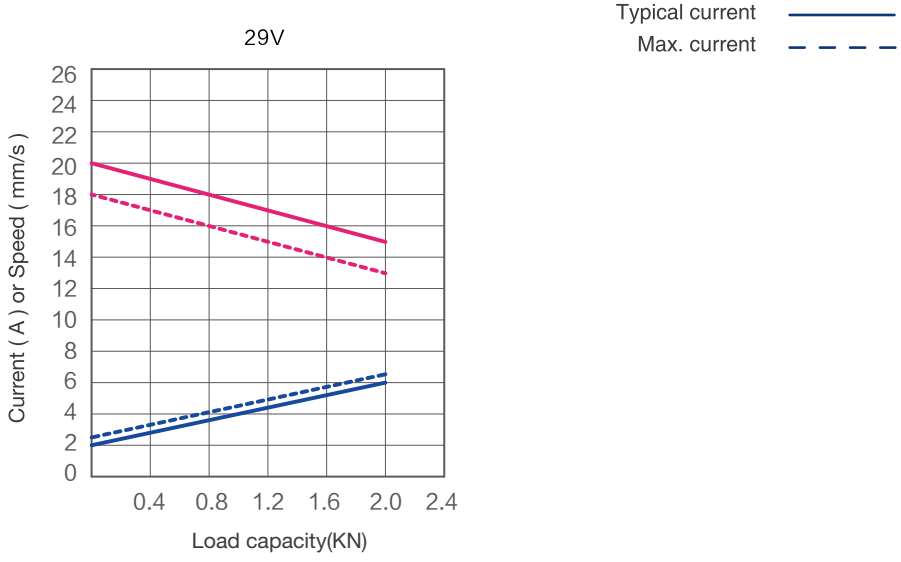

Ordering Example

Take **JC35EGY021529300/355O0103D010W** for example

Model	**JC35EG**	
Optional features	**X**	Y=Hall sensor
Profile code	**X**	0 = Standard
Load in push	**X**	2=2000N
Speed at full load	**X**	15=15mm/s
Input voltage	**XX**	29=29VDC
Stroke length/ Installation dimensions	**XXX/XXX**	Stroke length=XXX Installation dimensions =XXX
Mounting plate code	**X**	O=220*96*12
Cable outlet	**X**	0 =Side of top outlet
Type of connector and cable	**XX**	10=5 Pin Din connector
Cable length	**XXX**	3D0=3m
Surface treatment	**XX**	10=Plastic spraying treatment
Colour	**X**	W= White

Ordering Details

Dimension drawing of clevis

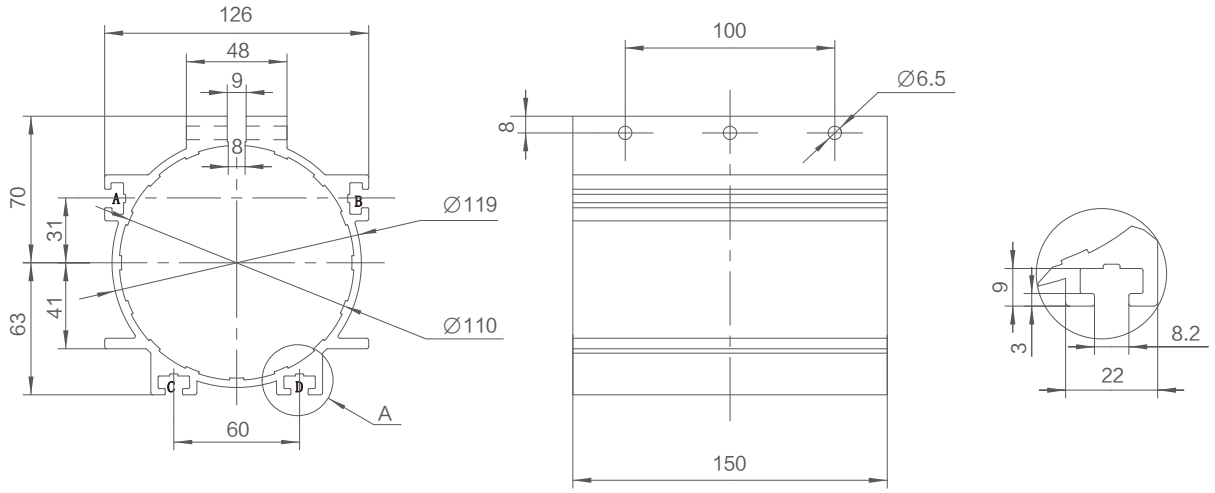

Motor cable

5 pin DIN plug

Supporting control boxes:
JCB35Q / JCB35T / JCB35R /
JCB35R1 / JCB35S

Pin	Color	Functions
1	Red	5V
2	Brown	power with positive voltage, actuator going down
3	Black	GND
4	Blue	power with positive voltage, actuator going up
5	Yellow	Hall sensor signal 1
Outer Circle	Orange	Hall sensor signal 2



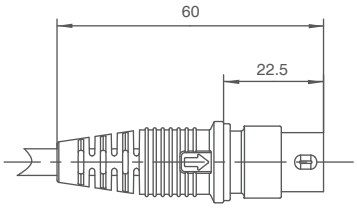

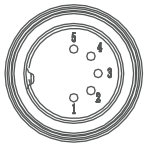

Strictly abiding by medical safety certifications

Passed EMC tests. To ensure our products pass all kinds of tests domestic or abroad.

Communication protocol development

Aiming at different applications, develop more extensive functions for control system.

Professional customization

Powerful R&D strength, fully satisfy customers' needs. Development cycle is about 10 days, seizing more market opportunities

Intelligent Control of Bluetooth

Mobile phone as the remote, applying in home care. Market pioneer, Jiecang provides better choices

Wireless Communication

Controllers adopt high-frequency wireless system. It can avoid interference mixing with signal receivers, assisting in remote control over medical equipment.

Latest Weighing System

Designed for physiotherapy beds and medical care beds. Cantilever carrying weighing sensor, it is applicable to different bedsteads dispensing with any adjustment

Disclaimer and Exclusion of Liability

The user must determine the suitability of JIECANG products under specific conditions. JIECANG is committed to providing the latest product information. However, as JIECANG's product are constantly improving, it is possible to make changes to JIECANG's product without prior notice. Therefore, JIECANG cannot guarantee the correctness and authenticity of the product information. Although JIECANG will do its best to meet the order requirements, due to the above reasons, JIECANG cannot guarantee the delivery capacity of any specific product.

Therefore, JIECANG reserves the right to stop selling any products listed on the website or product catalog or other JIECANG written materials. All sales activities must be carried out in accordance with the requirements of JIECANG sales and Delivery Standard Clauses. For copies of relevant documents, please contact JIECANG.

Notes for mounting and usage can be found in the corresponding mounting manual