JC35L28 Linear Actuator



1. JC35L28 is a quiet and durable actuator with high speed and high efficiency. It is rated up to IPX6, which makes it a preferable choice for different market and applications.
JC35L28 is available for below specifications:
JC35L28-10000N / 8000N (Standard);
JC35L28-10000N / 8000N (patient lift).

2. JC35L28 has a very elegant and compact design. JC35L28 works efficiently as well:
a. JC35L28-standard can load 8000N / 10000N on full stroke
b. JC35L28-patient lift can load 8000N / 10000N on 1/4 full stroke.

Features And Options

Dynamic Load Push(N):	10000N | 8000N
Dynamic Load Pull (N):	/
Colour:	Gray
Protection Class:	Max. IPX6
Stroke Length:	Patient lift version: 50-400mm(in steps of 4mm) Standard version: 50-250mm (in steps of 4mm)
Installation Dimension:	Patient lift version: L=S+260(50≤S≤300, with manual operation) L=S+290(300＜S≤400, with manual operation) Standard version: L=S+185(50≤S≤250, standard)
Noise Level:	≤48dB, (environmental noise≤40dB)
Standard:	Safety nut, Manual operation
Optional:	Hall sensor, Only push, Manual operation, Signal switch
Limit Switch:	Built-in (electronic)
Weight:	About 3kg (different stroke length and installation dimensions with different weight)
Static Bending Moment:	Lateral load is not allowed
Flame Retardant Grade:	UL94 HB grade
Approval:	IEC60601-1:2012 EN 60601-1:2006+A12:2014 ANSI/AAMI ES60601-1:2005/(R)2012 and A1:2012, C1:2009/(R)2012 and A2:2010/(R)2012

Usage

Duty Cycle:	10%, max. continuous work for 2min. and 18 min. off
Operating Temperature:	+5°C to +40°C
Reserve Temperature:	-10°C to +50°C
Supporting Control Box:	Matching with JIECANG control box
Relative Humidity:	20% to 90% at 30°C, non-condensing
Atmospheric Pressure:	700 to1060hPa

Dimensions

Patient lift version,front clevis F92,end clevis B40

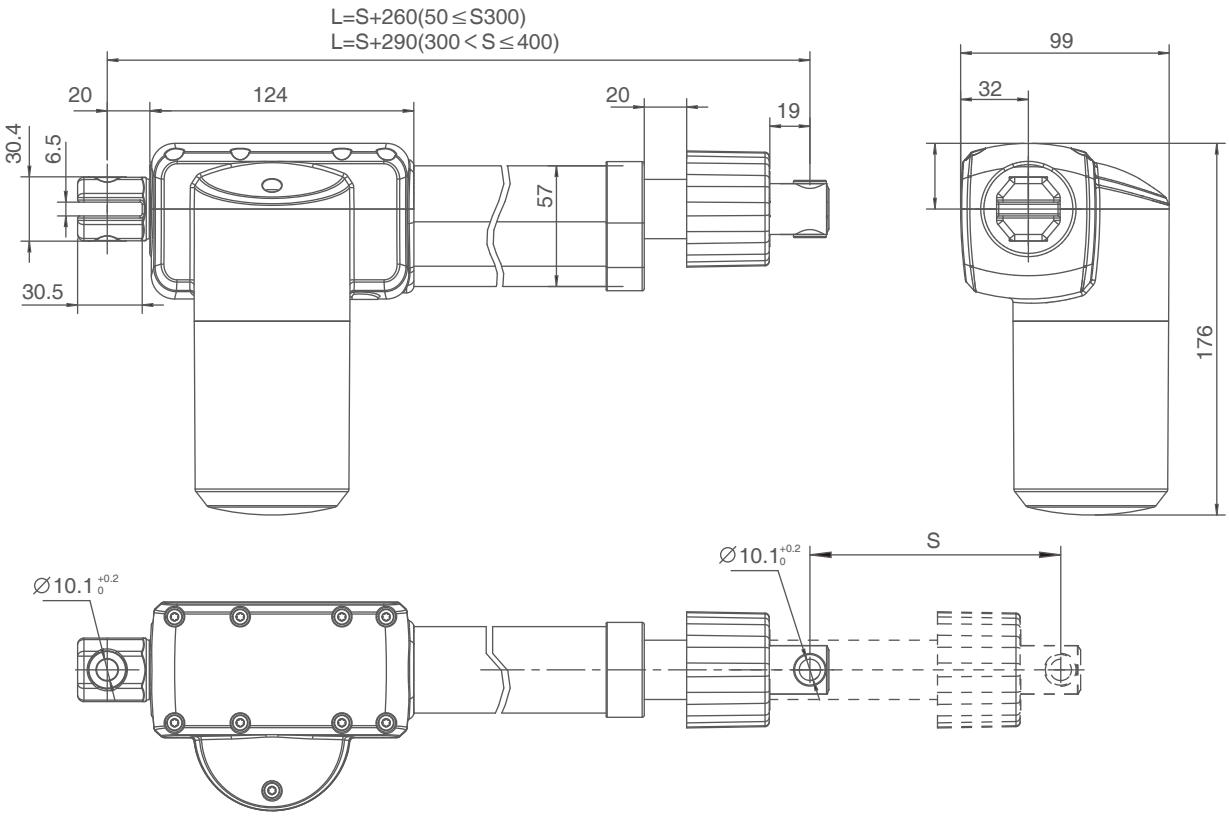

Standard version, front clevis F81,end clevis B40

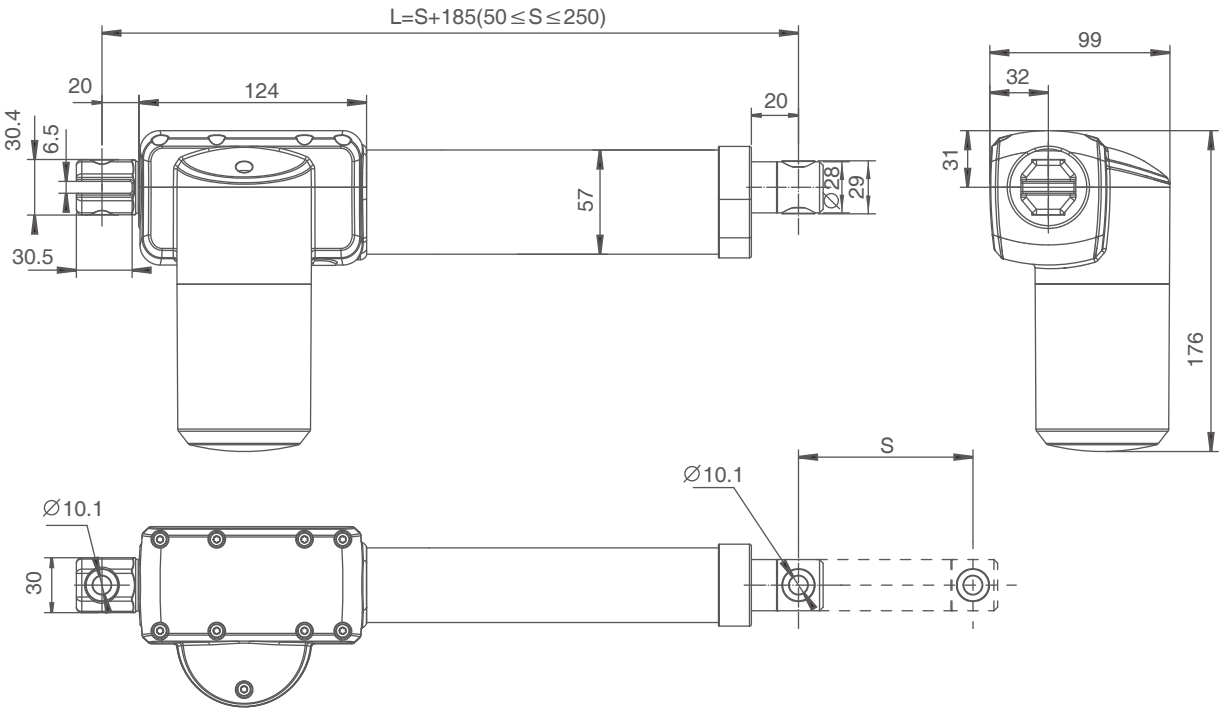

Technical Specifications (Standard Value)

Input voltage (VDC)	Spindle pitch (mm)	Max. load in push (N)	Max. load in pull (N)	Mechanical self-locking (N)	Speed at no load/full load (mm/s)	Current at full load (A)
24	6	10000	/	10000	6/4	≦7
	6	8000	/	8000	8/5.5	≦7
29	6	10000	/	10000	7.5/5.5	≦7.5
	6	8000	/	8000	10/7.3	≦7.5

Remarks: It can achieve better self-locking ability with Jiecang control box;
The above data is the standard value of the test data (inspection specification) at room temperature of 25°C.

Diagram of relationship between stroke length and load

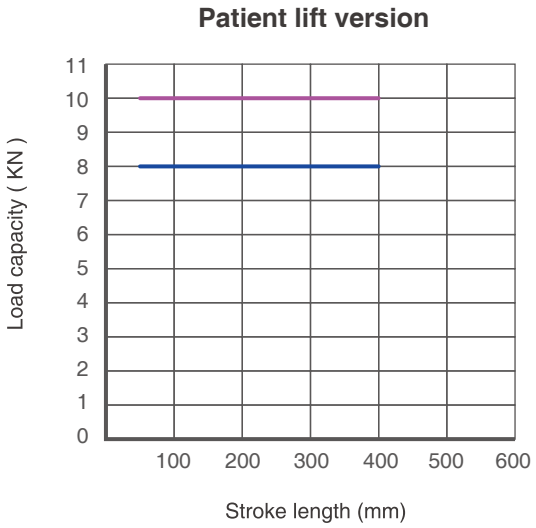

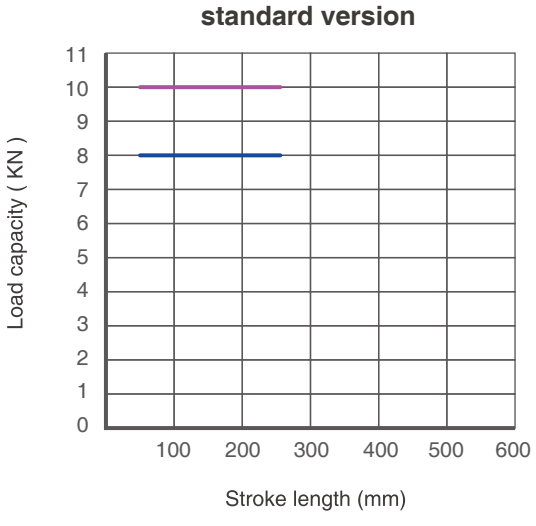

Characteristic Curve

Typical speed
Min. speed
Typical current
Max. current

10000N

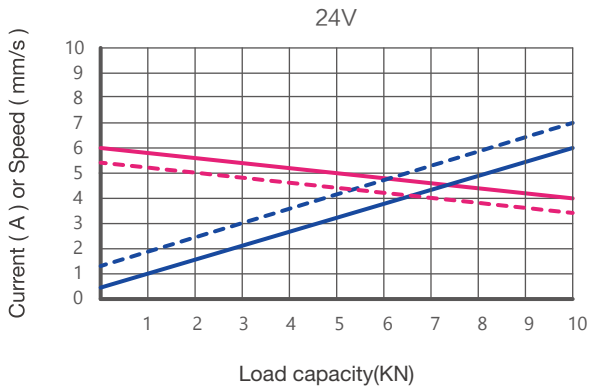

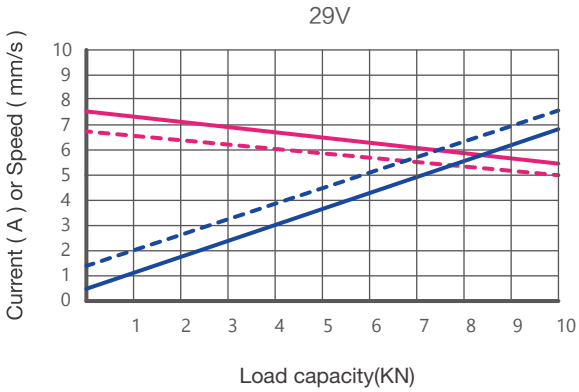

8000N

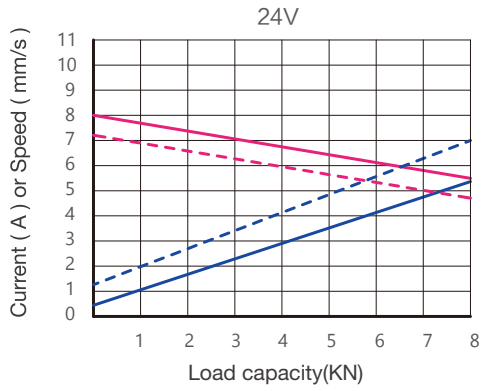

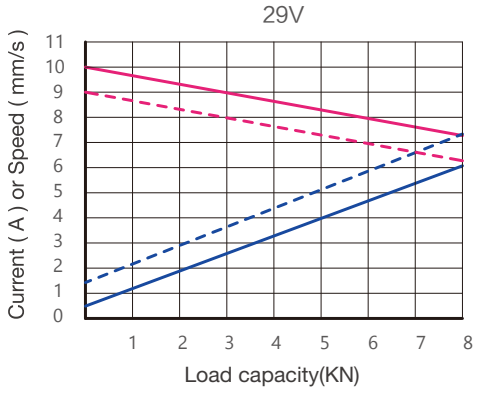

Ordering Key

Take **JC35L28X105D529350/640HGB40LF922022D0** as an example

Model	**JC35L28**	
Optional features	**X**	0 = Standard | P = Only push | S= Safety nut Y = Hall sensor | PY = Only push + Hall sensor X = Manual operation | SY = Safety nut + Hall sensor N = Only push + Safety nut + Hall sensor B = Signal switch+Mechanical end stop M7 = Manual operation+Only push no pull+Signal switch+2MOPP
Load in push	**X**	10=10000N | 8=8000N
Speed at full load	**X**	5D5=5.5mm/s | 7D3=7.3mm/s
Input voltage	**XX**	29=29VDC
Stroke length/ Installation dimension	**XXX/XXX**	Stroke length=XXX Installation dimensions =XXX
Clevis directions	**X**	H=horizontal V=vertical (to motor direction)
Colour	**X**	G=Gray
End clevis specification	**XX**	B40=slot 6.5, depth 30.5, ϕ10.1 with plastic bushing
End clevis material	**X**	L=Aluminium alloy
Front clevis specification	**XX**	F92=ϕ10.1 with plastic bushing, with manual lowering accessory F81=ϕ10.1 with plastic bushing
Brake specification	**X**	2= brake in push
Type of connector and cable	**XX**	02=4 Pin Din connector 10=5 Pin Din connector 93=6 Pin Mini-Fit elbow connector
Cable length	**XXX**	2D0=2m 0D5=0.5m

Ordering Details

Dimensions of clevis

End clevis:B40

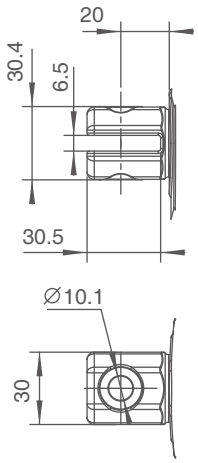

Patient lift version,front clevis:F60

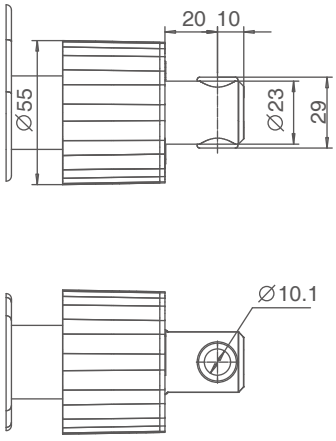

Standard version,front clevis F81

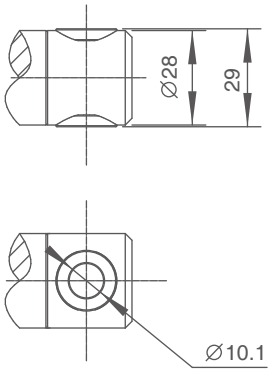

Motor cable

4 Pin Din connector (standard)

Supporting control boxes:
JCB35Q / JCB35T / JCB35R / JCB35R1 / JCB35S

Pin	Color	Functions
1	NC	Not connected
2	Brown	power with positive voltage, actuator going down
3	Blue	power with positive voltage, actuator going up
4	NC	Not connected
Outer Circle	NC	Not connected



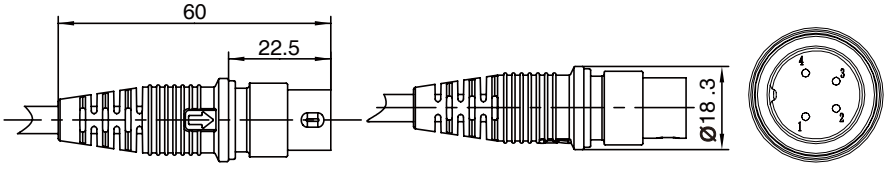

5 Pin DIN connector (with Hall sensor)

Supporting control boxes:
JCB35Q / JCB35T / JCB353R / JCB35R1 / JCB35S

Pin	Color	Functions
1	Red	5V
2	Brown	power with positive voltage, actuator going down
3	Black	GND
4	Blue	power with positive voltage, actuator going up
5	Yellow	Hall sensor signal 1
Outer Circle	Orange	Hall sensor signal 2



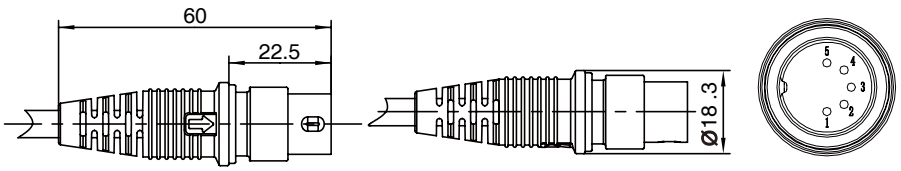

6 Pin Mini-Fit elbow connector

Supporting control box :
JCB35T2 / JCB35T3 / JCB35Q3 / JCB35K3

Pin	Color	Function
1	Orange	When not in the lower limit, it is connected with red
2	Brown	power with positive voltage, actuator going down
3	Black	When not in the upper limit, it is connected with yellow
4	Blue	power with positive voltage, actuator going up
5	Red	When not in the lower limit, it is connected with orange
6	Yellow	When not in the upper limit, it is connected with black

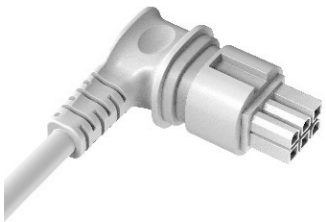

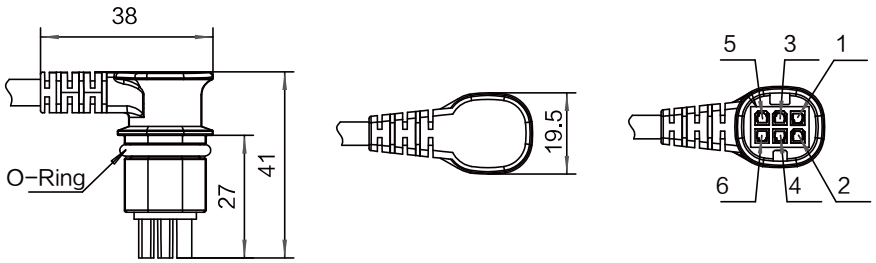

Strictly abiding by medical safety certifications

Passed EMC tests. To ensure our products pass all kinds of tests domestic or abroad.

Communication protocol development

Aiming at different applications, develop more extensive functions for control system.

Professional customization

Powerful R&D strength, fully satisfy customers' needs. Development cycle is about 10 days, seizing more market opportunities

Intelligent Control of Bluetooth

Mobile phone as the remote, applying in home care. Market pioneer, Jiecang provides better choices

Wireless Communication

Controllers adopt high-frequency wireless system. It can avoid interference mixing with signal receivers, assisting in remote control over medical equipment.

Latest Weighing System

Designed for physiotherapy beds and medical care beds. Cantilever carrying weighing sensor, it is applicable to different bedsteads dispensing with any adjustment

Disclaimer and Exclusion of Liability

The user must determine the suitability of JIECANG products under specific conditions. JIECANG is committed to providing the latest product information. However, as JIECANG's product are constantly improving, it is possible to make changes to JIECANG's product without prior notice. Therefore, JIECANG cannot guarantee the correctness and authenticity of the product information. Although JIECANG will do its best to meet the order requirements, due to the above reasons, JIECANG cannot guarantee the delivery capacity of any specific product.

Therefore, JIECANG reserves the right to stop selling any products listed on the website or product catalog or other JIECANG written materials. All sales activities must be carried out in accordance with the requirements of JIECANG sales and Delivery Standard Clauses. For copies of relevant documents, please contact JIECANG.

Notes for mounting and usage can be found in the corresponding mounting manual