JC35W8 Linear Actuator

Application field - Medical Line & Technical Line
Preferably in vent system, awning, harvesters,
automatic equipment as well engineering machinery.



JC35W8 is a quiet actuator with compact structure and small sizes. It has rich specifications of JC35W8-1000N; JC35W8-750N; JC35W8-500N; JC35W8-250N; JC35W8-125N; JC35W8-70N.
JC35W8 is rated up to Max.IPX6. Multiple signal feedback is available for JC35W8.

Features and options

Dynamic load push(N):	1000 | 750 | 500 | 250 | 125 | 70
Dynamic load pull (N):	1000 | 750 | 500 | 250 | 125 | 70
Stroke Length:	General: 25-1000mm (in steps of 4mm) With hall sensors: 25-1000mm (in steps of 4mm) With potentiometer: 1000N: 25-520mm (in steps of 4mm) 750N: 25-800mm (in steps of 4mm) | ≤500N: 25-1000mm (in steps of 4mm)
Installation Dimension (mm):	General and with hall sensor L=S+110 (25≤S≤610) | L=S+125 (610＜S≤765) L=S+145 (765＜S≤1000) With potentiometer L=S+145 (25≤S≤610) | L=S+160 (610＜S≤765) L=S+180 (765＜S≤1000)
Colour:	Silver gray
Limit Switch:	Built-in (electronic)
Weight:	About 1.5kg (different stroke length and installation dimensions with different weight)
Noise Level:	≤55dB (environmental noise≤40dB)
Static Bending Moment:	No lateral load
Duty Cycle:	10%, max. continuous work for 2min. and 18 min. off
Protection Class:	Max. IPX6
Options:	Hall sensor, Potentiometer
Standards:	EN 60335-1:2012+A11:2014+A13:2017+A1:2019+A14:2019+A2:2019 ANSI/AAMI ES60601-1: A1:2012, C1:2009/(R)2012 and A2:2010/(R)2012

Dimensions

General version and Hall version

Front clevis F47, end clevis 37

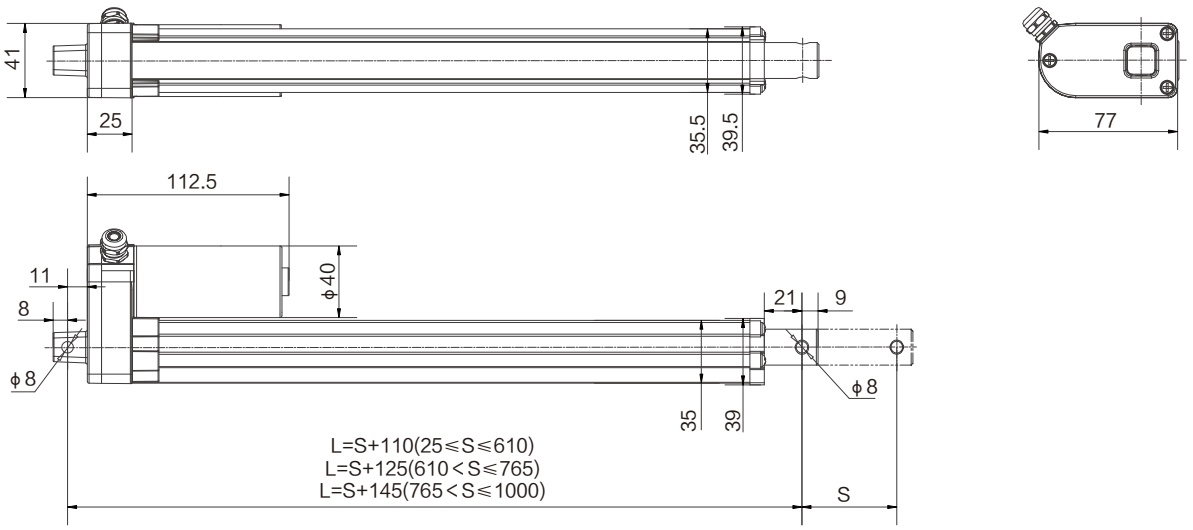

Front clevis F46, end clevis 38

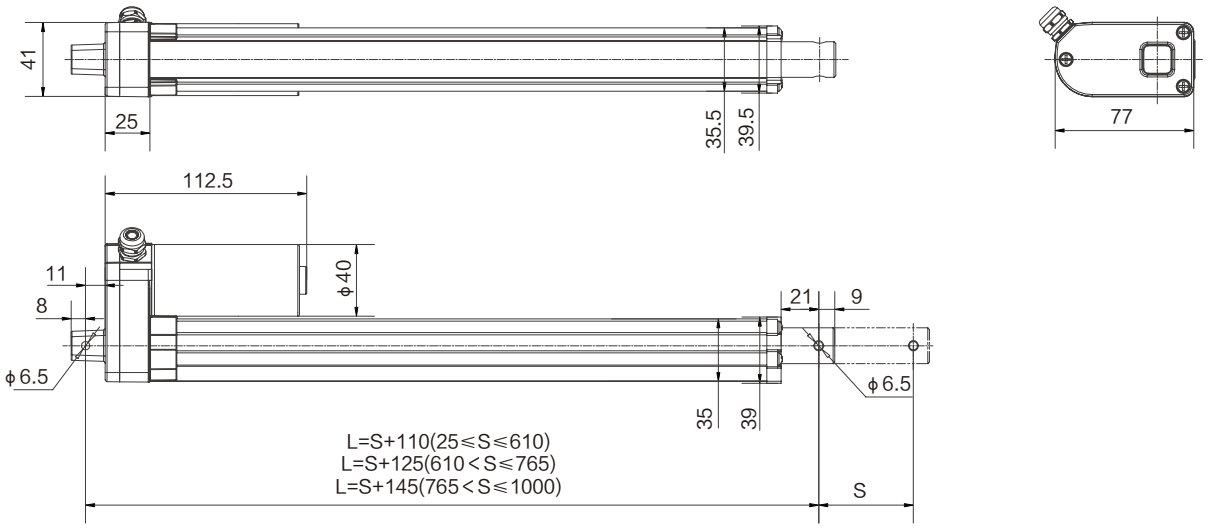

Potentiometer version

Front clevis F47, end clevis 37

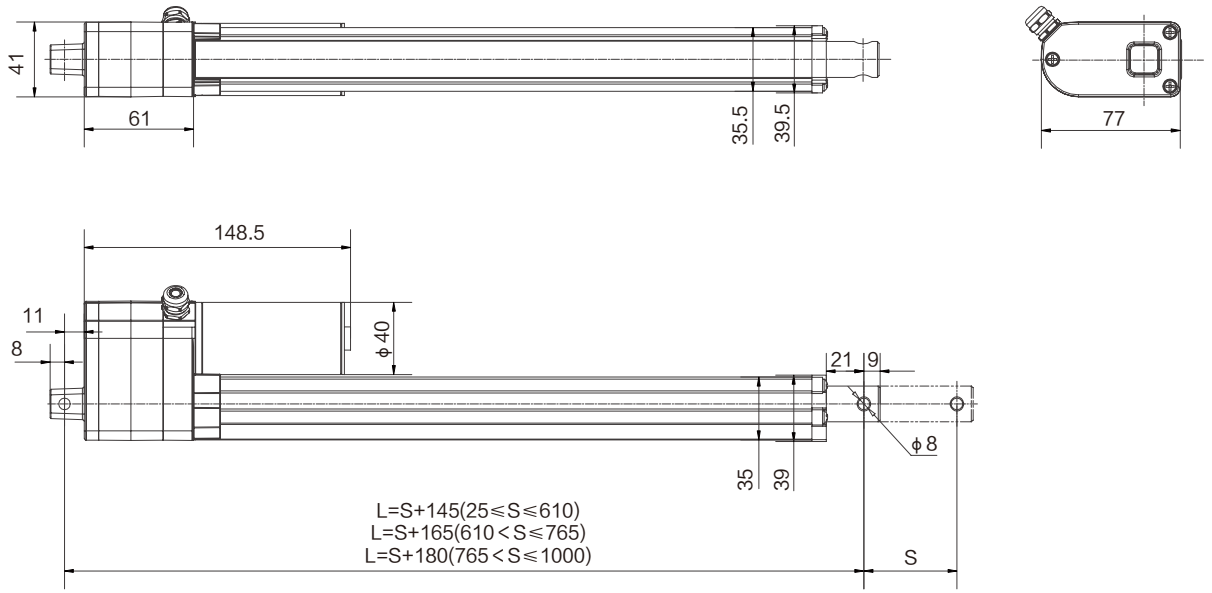

Front clevis F46, end clevis 38

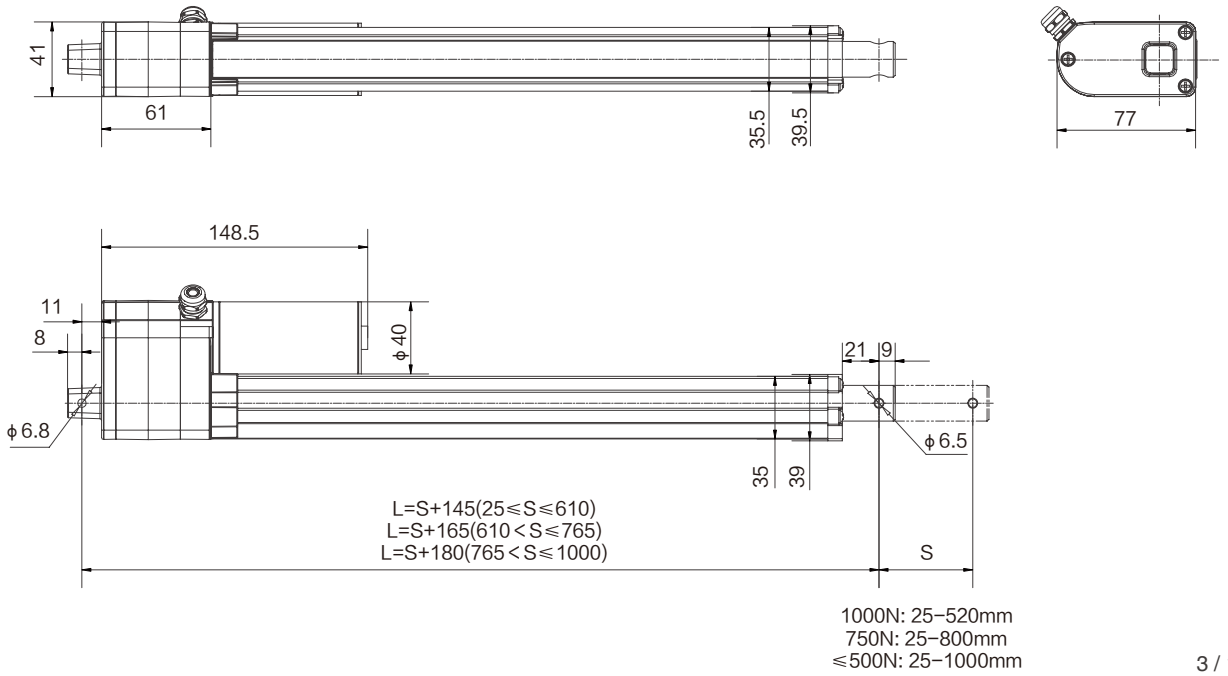

Technical Specifications (Standard Value)

Input voltage (VDC)	Spindle pitch (mm)	Max. load in push (N)	Max. load in pull (N)	Mechanical self-locking (N)	Speed at no load/full load (mm/s)	Current at full load (A)
12	2	1000	1000	1000	7/5	≤3.5
12	3	750	750	750	10/7.5	≤3.5
12	5	500	500	500	24/17	≤3.5
12	7.5	250	250	250	35/26	≤3.5
12	10	125	125	125	50/34.5	≤3.5
12	20	70	70	70	90/67.5	≤3.5
24	2	1000	1000	1000	7/5.2	≤2.0
24	3	750	750	750	10/7.9	≤2.0
24	5	500	500	500	24/18	≤2.0
24	7.5	250	250	250	35/27	≤2.0
24	10	120	120	120	50/36	≤2.0
24	20	70	70	70	90/71	≤2.0
36	2	1000	1000	1000	7/5.2	≤1.2

Remarks: It can achieve better self-locking ability with Jiecang control box;
The above data is the standard value of the test data (inspection specification) at room temperature of 25°C .

Diagram of relationship between stroke length and load

General version and Hall version

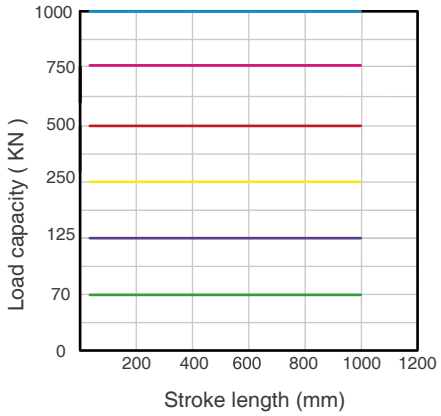

Potentiometer version

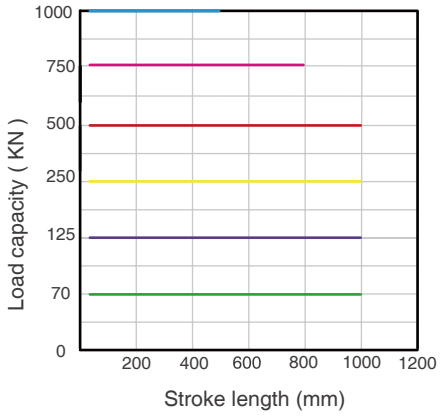

Characteristic Curve

Typical speed
Min. speed
Typical current
Max. current

70N

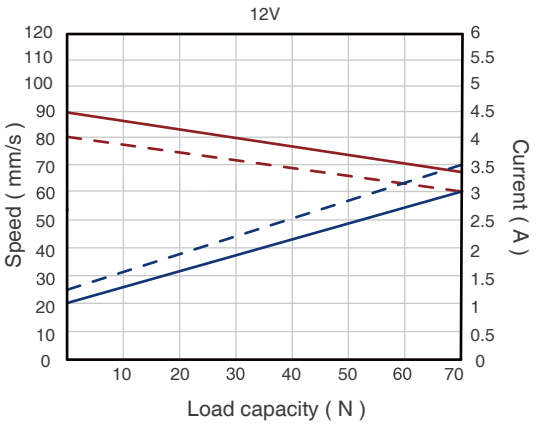

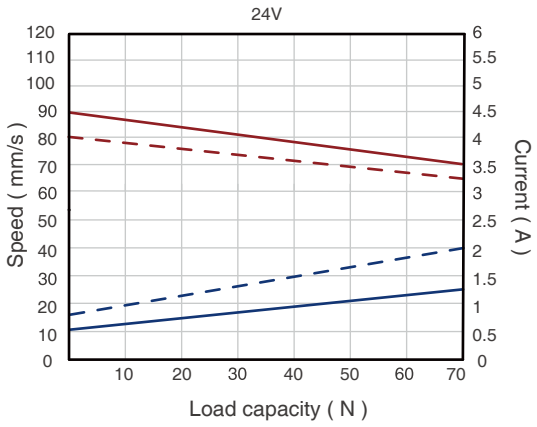

Typical speed
Min. speed
Typical current
Max. current

125N

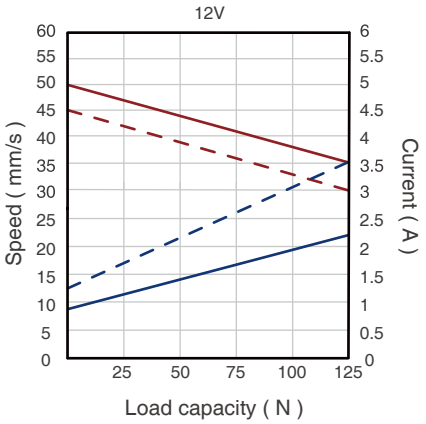

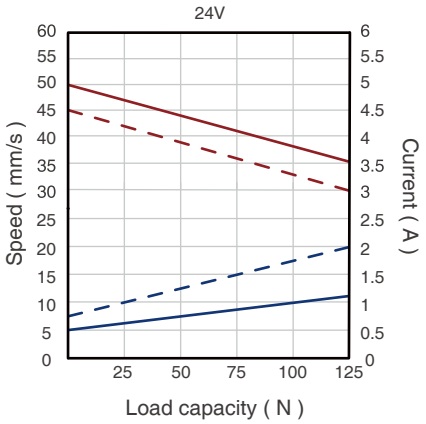

250N

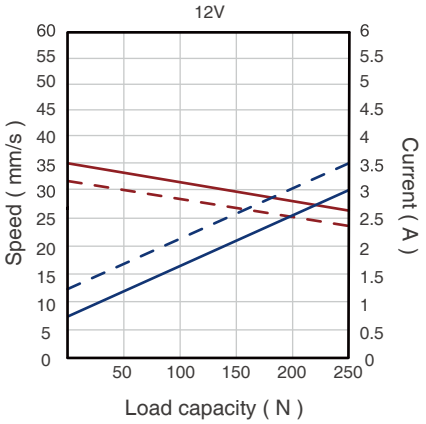

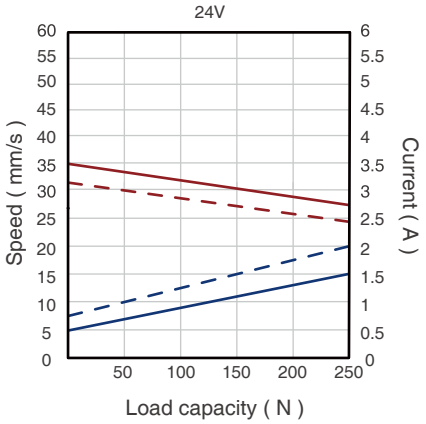

500N

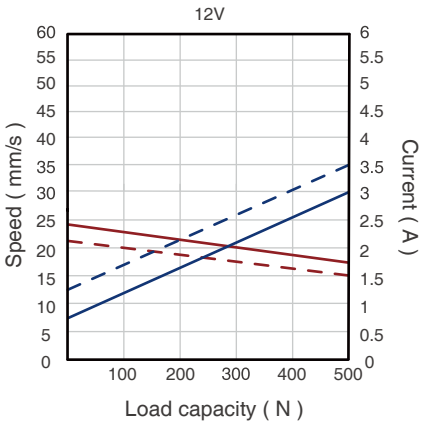

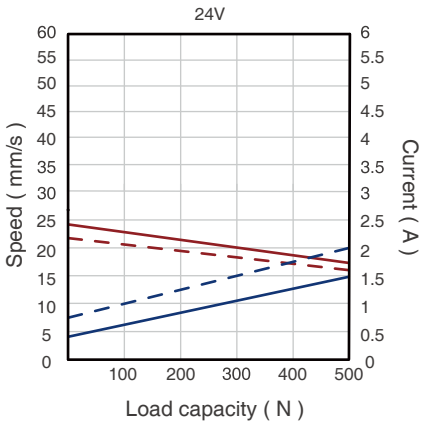

Typical speed
Min. speed
Typical current
Max. current

750N

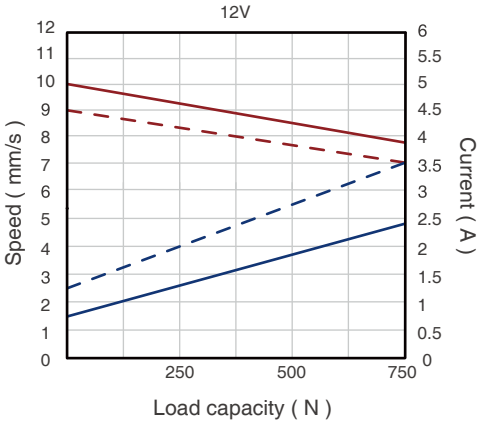

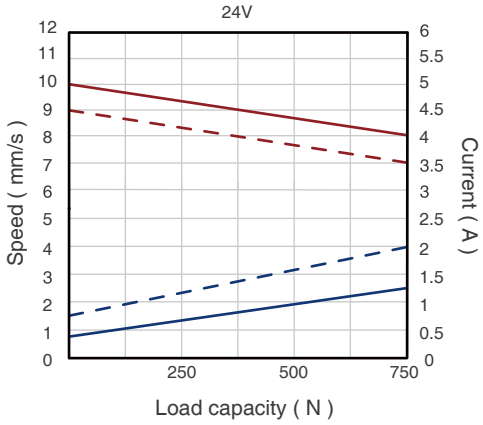

1000N

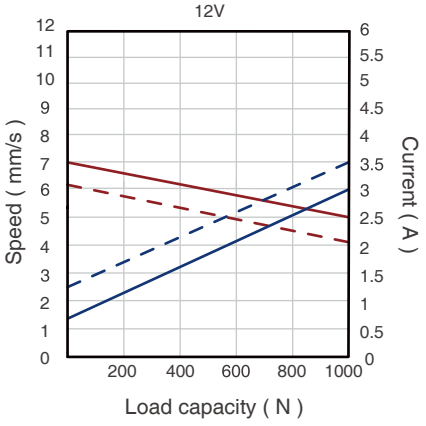

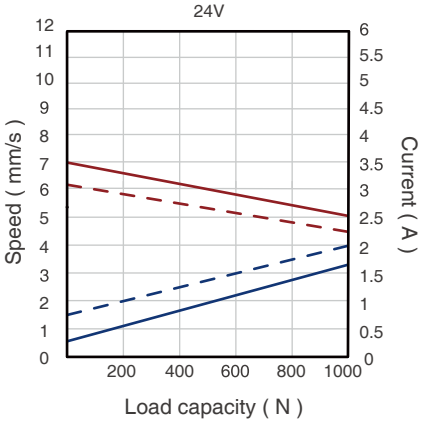

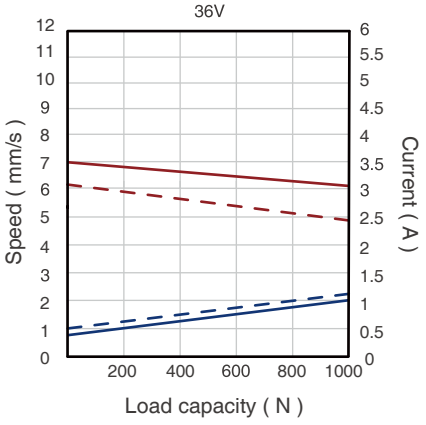

Ordering Key

Take **JC35W8DD75712152/292VG38L740211D5** as an example

Model	**JC35W8**	
Optional features	**X**	0 = Standard / Y = Hall sensor / D = Potentiometer
Load in push	**X**	1 = 1000N / 0D75 = 750N / 0D5 = 500N 0D25 = 250N / 0D125 = 125N / 0D07 = 70N
Speed at full load	**X**	5 = 5mm/s | 5D2 = 5.2mm/s 7D5 = 7.5mm/s | 7D9 = 7.9mm/s 17 = 17mm/s | 18= 18mm/s 26 = 26mm/s | 27 = 27mm/s 34D5 = 34.5mm/s | 36 = 36mm/s 67D5 = 67.5mm/s | 71 = 71mm/s
Input voltage	**XX**	12 = 12VDC / 24 = 24VDC / 36=36VDC
Stroke length/ Installation dimension	**XXX/XXX**	Stroke length = XXX Installation dimension = XXX
Clevis directions	**X**	H=horizontal V=vertical (to motor direction)
Colour	**X**	G = Silver gray
End clevis specification	**XX**	37 = hole 8.0 without slot 38 = hole 6.5 without slot (can be customized)
End clevis material	**X**	L = Aluminum alloy
Front clevis specification	**XX**	F47 = hole diameter 8.0 F46 - hole diameter 6.5
Brake specification	**X**	0 = Standard
Type of connector and cable	**XX**	02 =4 Pin Din connector 10= 5 Pin Din connector
Cable length	**XXX**	2D0 = 2m / 1D5 = 1.5m / 0D5 = 0.5m

Ordering Details

Dimensions of clevis

End clevis: 37

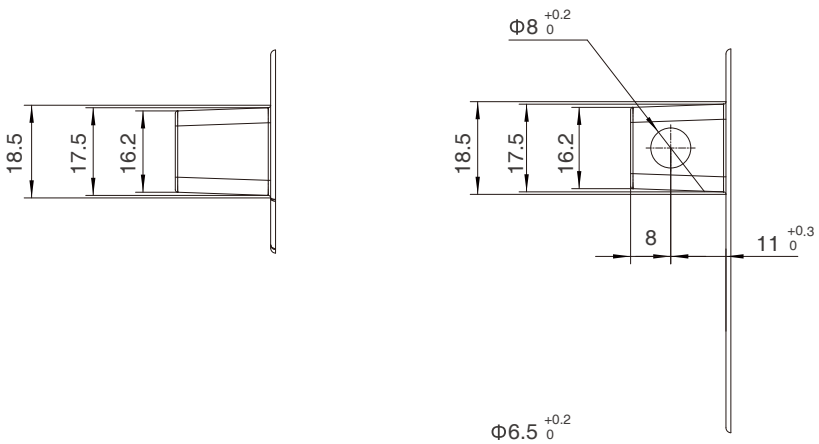

End clevis: 38

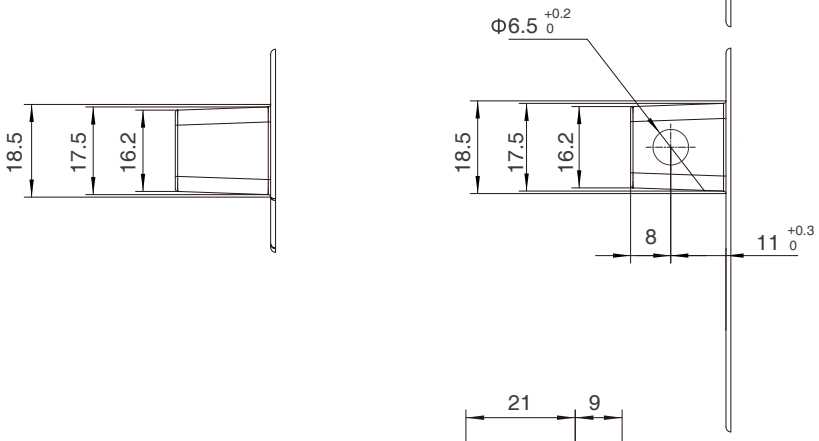

Front clevis: F47

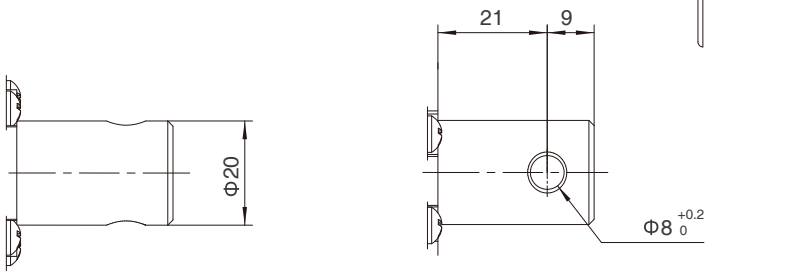

Front clevis: F46

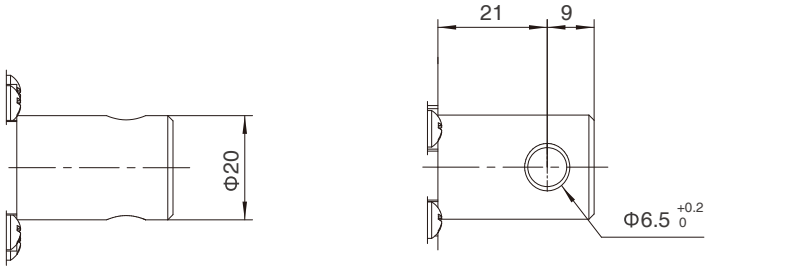

Motor cable

4 Pin Din connector (standard)

Supporting control box : JCB35Q / JCB35T / JCB35R / JCB35R1 / JCB35S

Pin	Color	Function
1	NC	Not connected
2	Brown	Powered with +, actuator going down
3	Blue	Powered with +, actuator going up
4	NC	Not connected
Outer ring	NC	Not connected



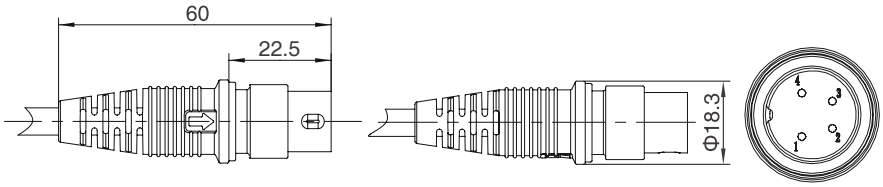

5 Pin Din connector (with hall sensors)

Supporting control box : JCB35Q / JCB35T / JCB35R / JCB35R1 / JCB35S

Pin	Color	Function
1	Red	5V
2	Brown	Powered with +, actuator going down
3	Black	GND
4	Blue	Powered with +, actuator going up
5	Yellow	Hall signal 1
Outer ring	Orange	Hall signal 2



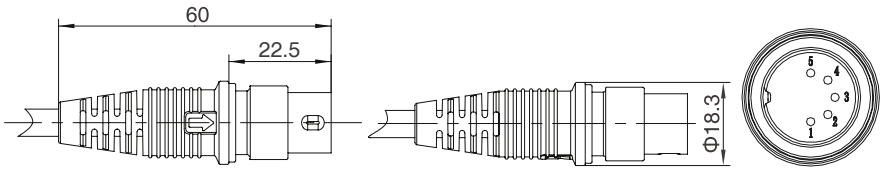

5 Pin Din connector (with potentiometer)

Supporting control box :
JCB35Q / JCB35T / JCB35R / JCB35R1 / JCB35S

Pin	Color	Function
1	Red	0 Ω
2	Brown	Powered with +, actuator going down
3	Black	GND
4	Blue	Powered with +, actuator going up
5	Yellow	10,000 Ω



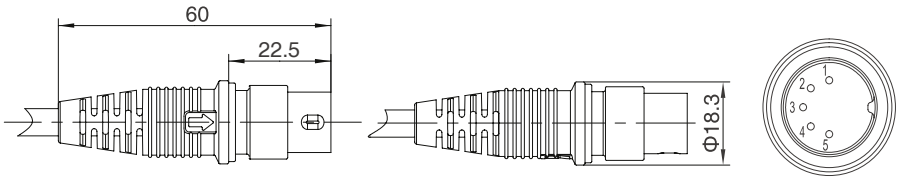

Strictly abiding by medical safety certifications

Passed EMC tests. To ensure our products pass all kinds of tests domestic or abroad.

Communication protocol development

Aiming at different applications, develop more extensive functions for control system.

Professional customization

Powerful R&D strength, fully satisfy customers' needs. Development cycle is about 10 days, seizing more market opportunities

Intelligent Control of Bluetooth

Mobile phone as the remote, applying in home care. Market pioneer, Jiecang provides better choices

Wireless Communication

Controllers adopt high-frequency wireless system. It can avoid interference mixing with signal receivers, assisting in remote control over medical equipment.

Latest Weighing System

Designed for physiotherapy beds and medical care beds. Cantilever carrying weighing sensor, it is applicable to different bedsteads dispensing with any adjustment

Disclaimer and Exclusion of Liability

The user must determine the suitability of JIECANG products under specific conditions. JIECANG is committed to providing the latest product information. However, as JIECANG's product are constantly improving, it is possible to make changes to JIECANG's product without prior notice. Therefore, JIECANG cannot guarantee the correctness and authenticity of the product information. Although JIECANG will do its best to meet the order requirements, due to the above reasons, JIECANG cannot guarantee the delivery capacity of any specific product.

Therefore, JIECANG reserves the right to stop selling any products listed on the website or product catalog or other JIECANG written materials. All sales activities must be carried out in accordance with the requirements of JIECANG sales and Delivery Standard Clauses. For copies of relevant documents, please contact JIECANG.

Notes for mounting and usage can be found in the corresponding mounting manual

TECHNOLOGY
DRIVES INTELLIGENT LIFE