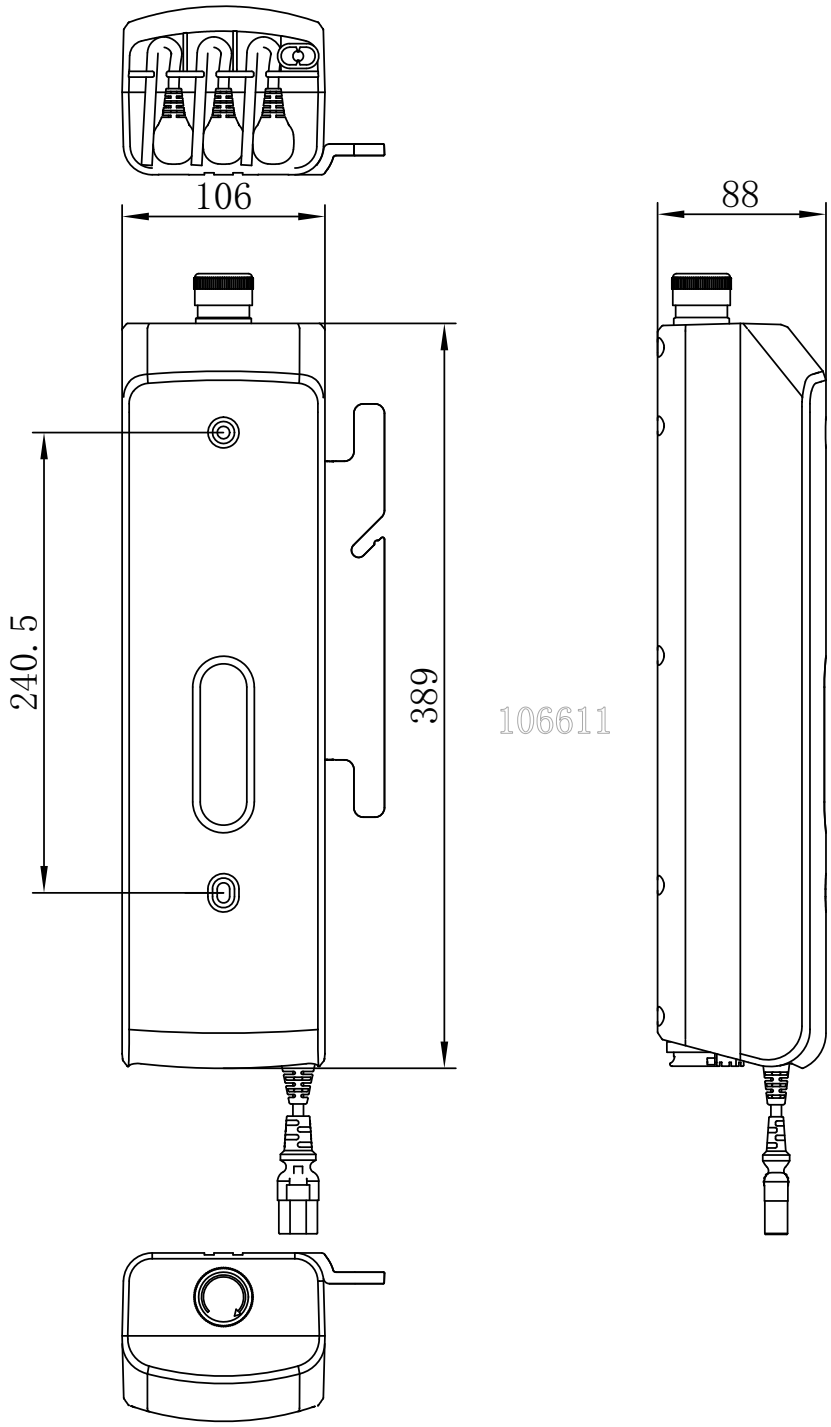
106
88
240.5
389
106611